COM332-B (R.A)

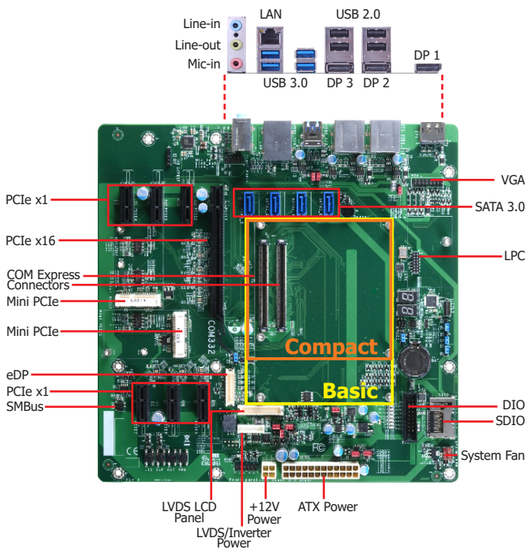

Features

- COM Express® R2.1, Pin-out Type 6
- Supports Compact and Basic modules
- Multiple displays: VGA, LVDS, DP, eDP
- Rich I/O: 1 GbE, 4 USB 3.0, 4 USB 2.0
- microATX form factor

Mini PCIe | SDIO | Debug LED | 8 DIO | R2.1 Type6

Specifications

GRAPHICS	**Display**	1 x VGA 1 x LVDS/eDP (eDP available upon request) 3 x DP 1 x eDP/LVDS (LVDS available upon request)	
EXPANSION	**Interface**	1 x PCIe x16 6 x PCIe x1 2 x Full-size Mini PCIe 1 x SDIO	
AUDIO	**Audio Codec**	Realtek ALC888S-VD2-GR	
REAR I/O	**Ethernet**	1 x GbE (RJ-45)	
	USB	4 x USB 3.0 4 x USB 2.0	
	Display	3 x DP	
	Audio	1 x Line-in 1 x Line-out 1 x Mic-in	
INTERNAL I/O	**Serial**	2 x Serial Interface Connector (TX/RX)	
	Display	1 x VGA (2.54mm) 1 x LVDS LCD Panel Connector 1 x LCD/Inverter Power 1 x eDP LCD Panel Connector	
	Audio	1 x Audio (Line-out/Mic-in) 1 x S/PDIF	
	SATA	4 x SATA 3.0 (up to 6Gb/s)	
	DIO	1 x 8-bit DIO	
	LPC	1 x LPC	
	SMBus	1 x SMBus	
POWER	**Type**	12V, 5VSB, VCC_RTC (ATX mode)	12V, VCC_RTC (AT mode)
	Connector	4-pin ATX 12V power	24-pin ATX power
	RTC Battery	CR2032 Coin Cell	
ENVIRONMENT	**Temperature**	Operating: 0 to 60°C	Storage: -40 to 85°C
	Humidity	Operating: 5 to 90% RH	Storage: 5 to 90% RH
	MTBF	488,117 hrs @ 25°C; 253,684 hrs @ 45°C; 136,621 hrs @ 60°C Calculation Model: Telcordia Issue 2, Method Case 3 Environment: GB, GC – Ground Benign, Controlled	
MECHANICAL	**Dimensions**	microATX Form Factor	244mm (9.6") x 244mm (9.6")
	Compliance	PICMG COM Express® R2.1, Type 6	Basic, Compact Modules
CERTIFICATIONS		CE, FCC, RoHS	

Mechanical Drawing

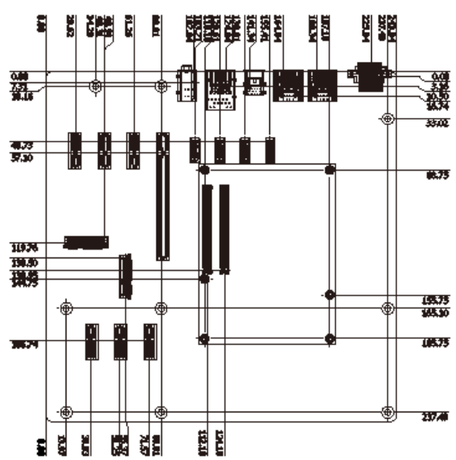

Block Diagram

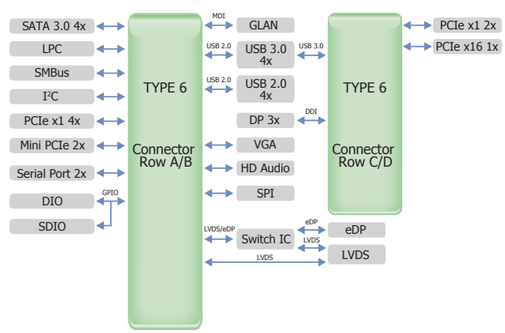

Ordering Information

Model Name	P/N	GbE	USB 3.0	USB 2.0	Power	Thermal	Temp.
COM332-B (R.A)	770-CM3321-000G	1	4	4	ATX/AT	Active	0 to 60°C

Packing List

• 1 COM332-B (R.A) board	
• 1 Serial ATA data cable (Length: 500mm)	332-553001-005G
• 1 VGA cable	A81-012000-000G

Optional Items

• Serial ATA data cable (Length: 500mm)	332-553001-005G
• LPC EXT-RS232 module (4 x RS232 ports)	770-EXTRS1-000G
• LPC EXT-RS485 module (4 x RS485 ports)	770-EXTRS1-100G
• I/O shield	A49-COM332-010G

DFI reserves the right to change the specifications at any time prior to the product's release. Changes thereafter will be based on the product's revision. Please contact your sales representative for the exact revision offered in your area. All product names mentioned are trademarks of their respective companies. © Aug 06, 2020 DFI Inc.